CS 635 Advanced Object-Oriented Design & Programming
Spring Semester, 2012
Doc 18 Prototype & Chain of Responsibility
April 3, 2012

Assignment 3

Student Test Class

```
public class ASS3Test {
    boolean debug = false;
    URLConnection urlConnection;

    @Before
    public void init() {
        try {
            if (debug) {
                this.urlConnection = mock(URLConnection.class);
                when(urlConnection.getLastModified()).thenReturn(1533389966554L);
            } else {
                URL url = new URL("http://www.google.com");
                this.urlConnection = url.openConnection();
            }
        } catch (Exception e) {
            System.out.println(e.getMessage());
        }
    }
}
```

Student Test Class - Continued

```
@Test
 public void test() {
     try {
         WebUpdater wd = new WebUpdater(urlConnection);
         wd.addObserver(new Observer1());
         wd.addObserver(new Observer2());
         wd.checkModifiedDate();
     } catch (Exception e) {
         System.out.println(e.getMessage());
     }
 }
```

Student Question

is init() a factory method?

Which is better?

```
URL url = new URL("http://www.google.com");
urlConnection = url.openConnection();
WebUpdater wd = new WebUpdater(urlConnection);
```

Verses

```
WebUpdater wd = new WebUpdater("http://www.google.com");
```

How is this a test?

```
@Test
 public void test() {
     try {
         WebUpdater wd = new WebUpdater(urlConnection);
         wd.addObserver(new Observer1());
         wd.addObserver(new Observer2());
         wd.checkModifiedDate();
     } catch (Exception e) {
         System.out.println(e.getMessage());
     }
 }
```

Prototype

Prototype

Specify the kinds of objects to create using a prototypical instance, and create new objects by copying this prototype

Applicability

Use the Prototype pattern when

A system should be independent of how its products are created, composed, and represented; and

When the classes to instantiate are specified at run-time; or

To avoid building a class hierarchy of factories that parallels the class hierarchy of products; or

When instances of a class can have one of only a few different combinations of state.

Insurance Example

Insurance agents start with a standard policy and customize it

Two basic strategies:

- Copy the original and edit the copy
- Store only the differences between original and the customize version in a decorator

Copying Issues

Shallow Copy Verse Deep Copy

Original Objects

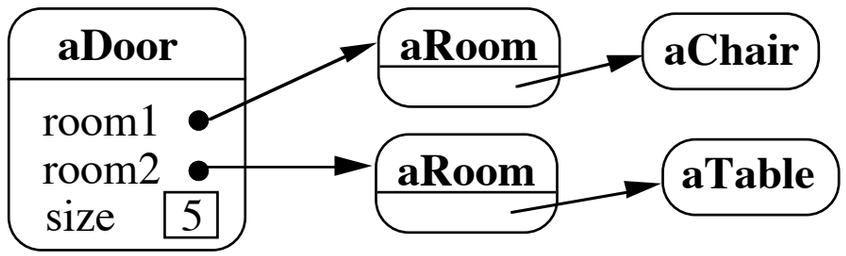

Shallow Copy

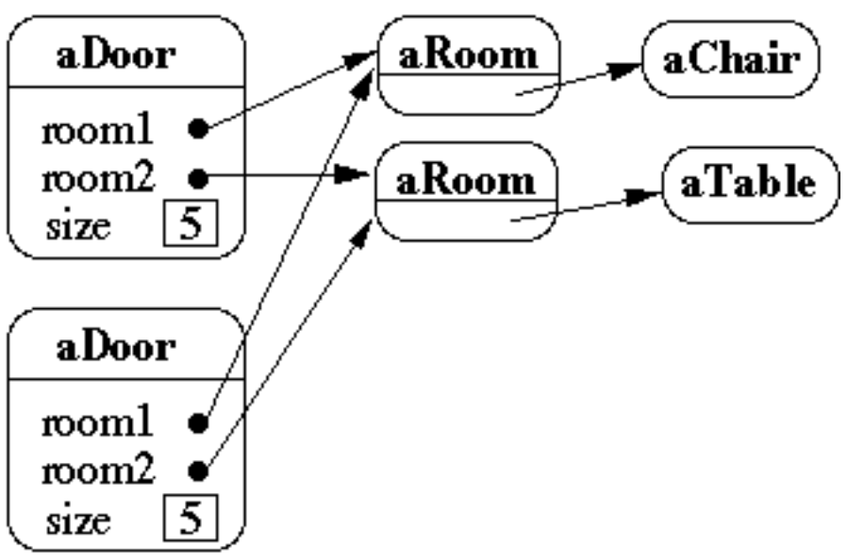

Shallow Copy Verse Deep Copy

Original Objects

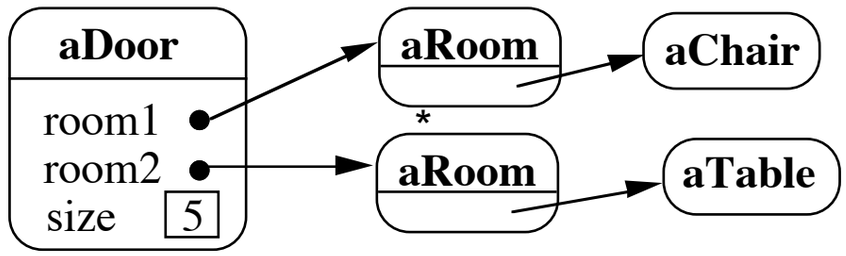

Deep Copy

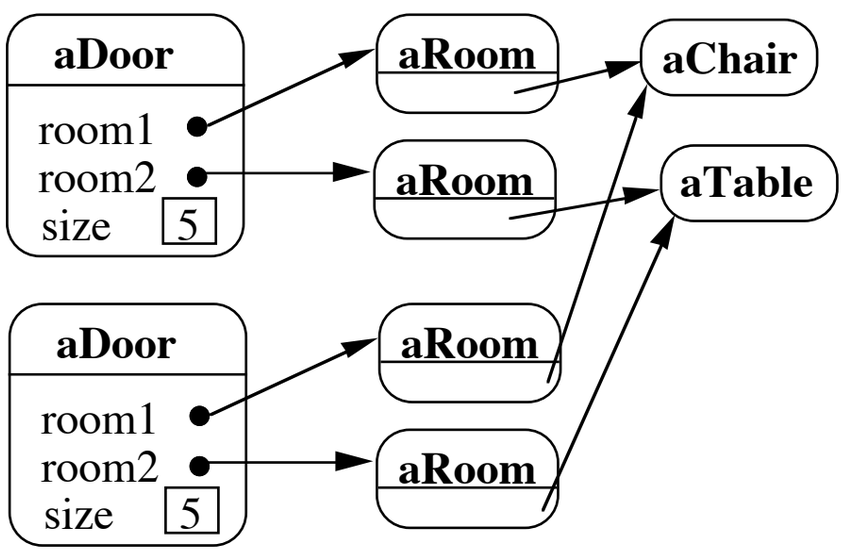

Deeper Copy

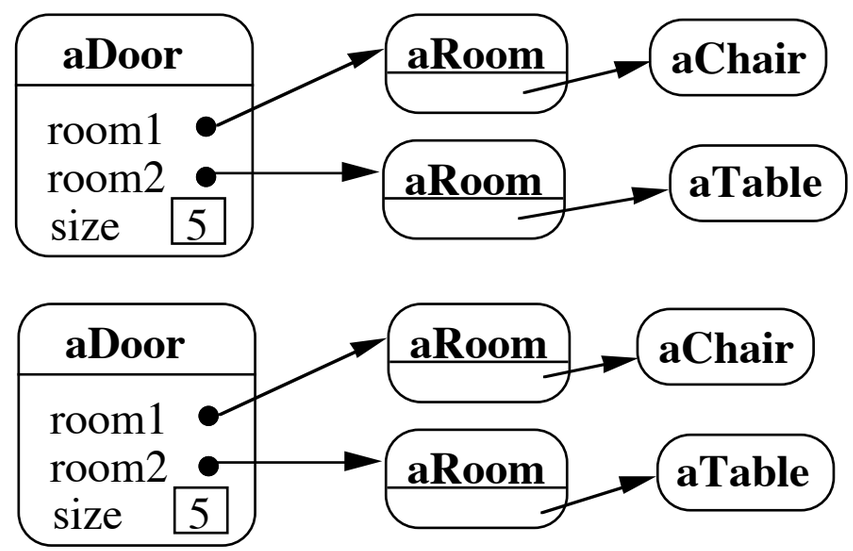

Cloning Issues - C++ Copy Constructors

```
class Door {
        public:
                Door();
                Door( const Door&);
                virtual Door* clone() const;

                virtual void Initialize( Room*, Room* );
                // stuff not shown
        private:
                Room* room1;
                Room* room2;
        }

Door::Door ( const Door& other ) //Copy constructor {
        room1 = other.room1;
        room2 = other.room2;
        }

Door* Door::clone()  const {
        return new Door( *this );
        }
```

Cloning Issues - Java Clone

Shallow Copy

```
class Door implements Cloneable {
        private Room room1;
        private Room room2;

        public Object clone() throws  CloneNotSupportedException {
                return super.clone();
        }
}
```

Deep Copy

```
public class Door implements Cloneable {
        private Room room1;
        private Room room2;

        public Object clone() throws CloneNotSupportedException {
                Door thisCloned =(Door) super.clone();
                thisCloned.room1 = (Room)room1.clone();
                thisCloned.room2 = (Room)room2.clone();
                return thisCloned;
        }
}
```

Prototype-based Languages

No classes

Behaviour reuse (inheritance)

- Cloning existing objects which serve as prototypes

Some Prototype-based languages

- Self
- JavaScript
- Squeak (eToys)
- Perl with Class::Prototyped module

Chain of Responsibility

Chain of Responsibility

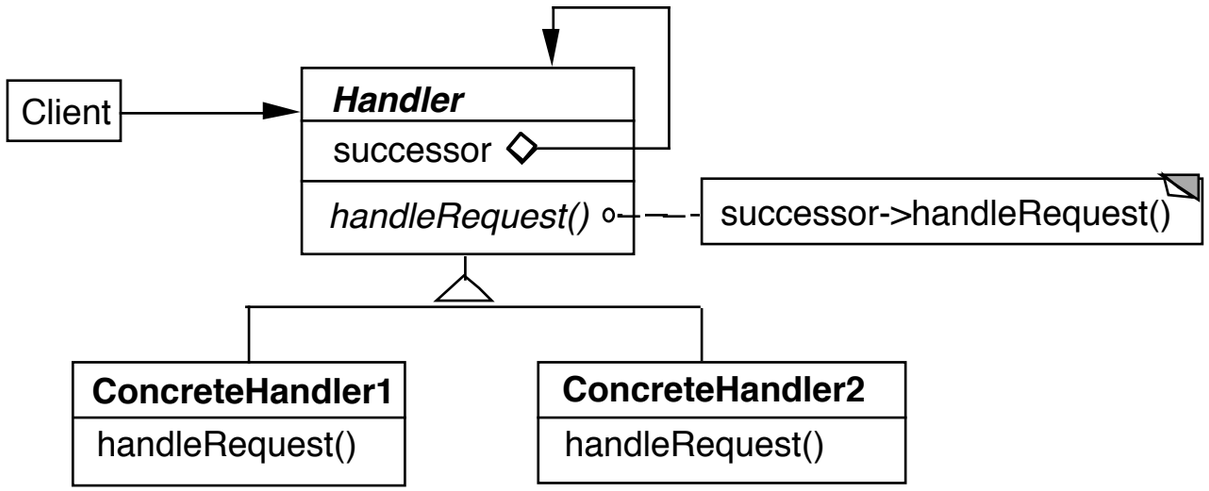

Dynamically create chain of handlers

Multiple handlers may be able to handle a request

Only one handler actually handles the request

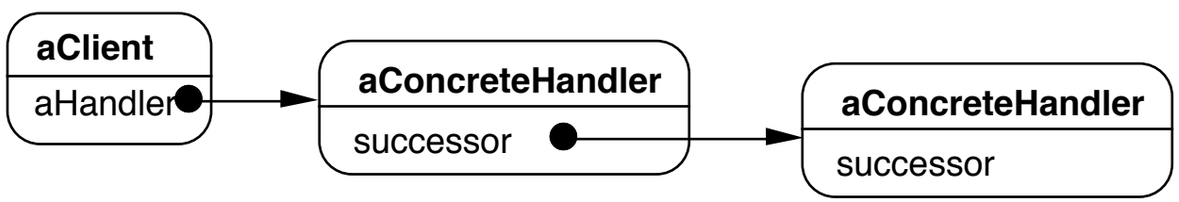

Consequences

Reduced coupling

Added flexibility in assigning responsibilities to objects

Not guaranteed that request will be handled

Finding Methods

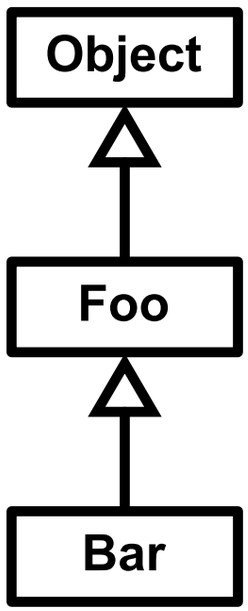


```
test = new Bar();
test.toString();
```

Context Help System

User clicks on component for help

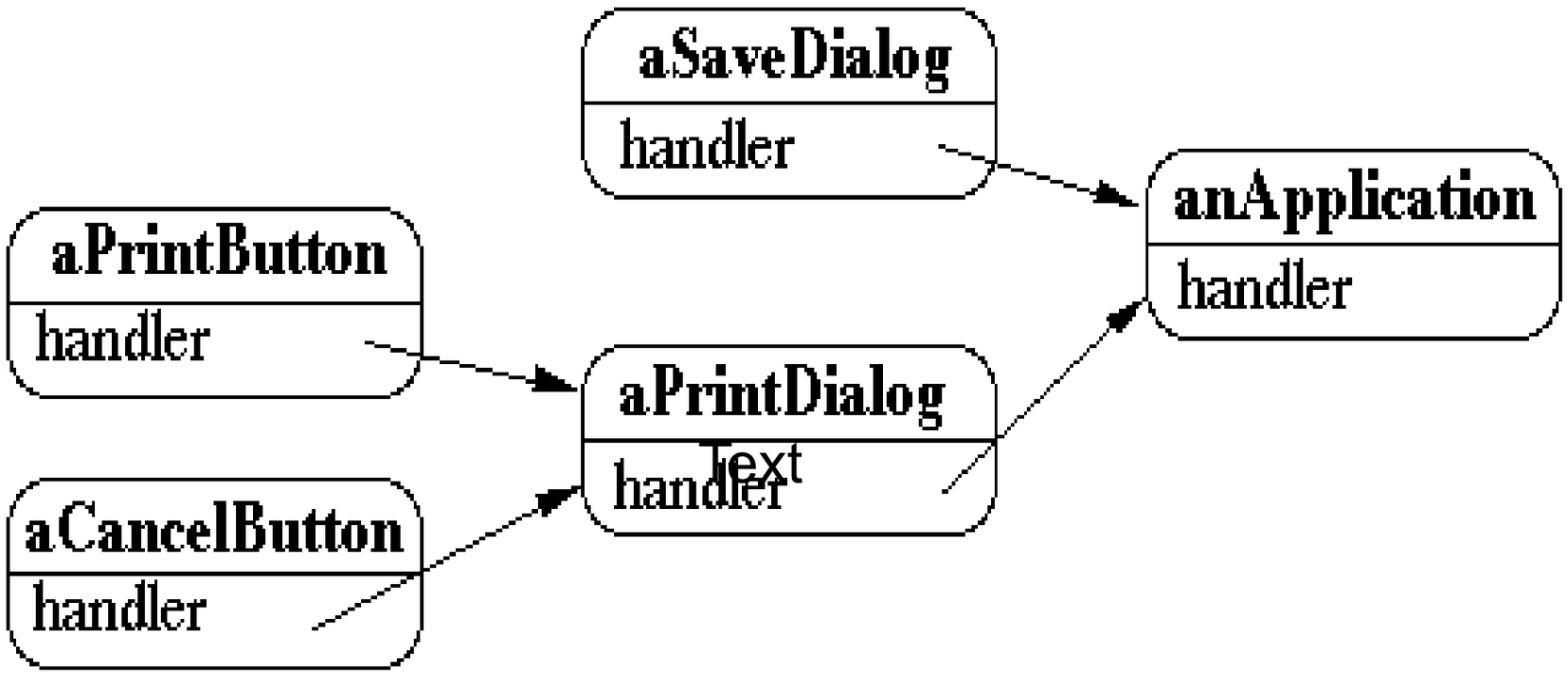

Tree of handlers

From specific to general

Email Filters in Mail Client

User creates a set of rules

- delete
- move
- modify

Chain the rules

First rule that applies handles the mail

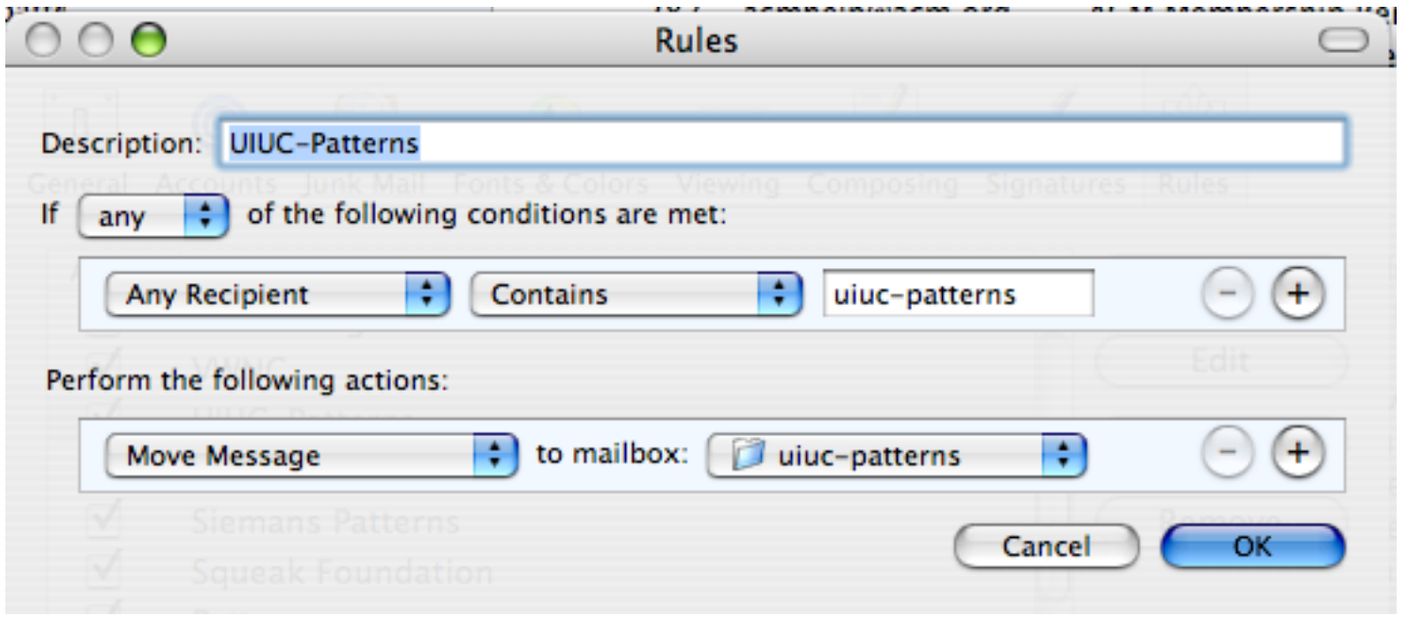

Other Examples

Java 1.0 AWT action(Event)

http://wiki.cs.uiuc.edu/PatternStories/JavaAWT

javax.servlet.Filter

http://tomcat.apache.org/tomcat-4.1-doc/servletapi/javax/servlet/Filter.html

Microsoft Windows global keyboard events

http://www.javaworld.com/javaworld/jw-08-2004/jw-0816-chain.html

Apache Commons Chain

http://commons.apache.org/chain/

Logger Example

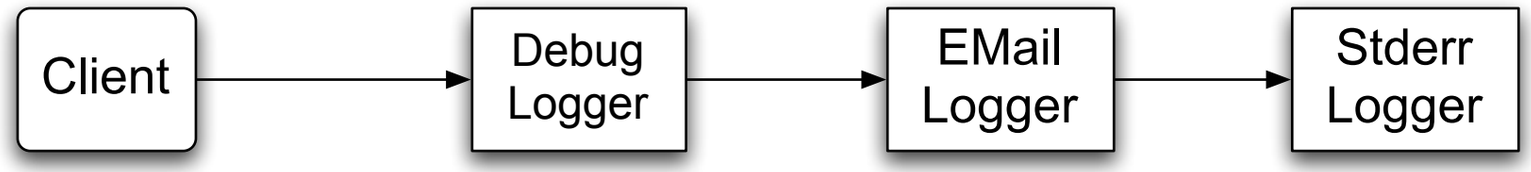


```
class ChainOfResponsibilityExample {
   public static void main(String[] args) {
      // building the chain of responsibility
      Logger l = new DebugLogger(Logger.DEBUG).setNext(
                 new EMailLogger(Logger.ERR).setNext(
                  new StderrLogger(Logger.NOTICE) ) );

      l.message("Entering function x.", Logger.DEBUG);    // handled by DebugLogger
      l.message("Step1 completed.", Logger.NOTICE);       // handled by Debug- and
StderrLogger
      l.message("An error has occurred.", Logger.ERR);    // handled by all three Logger
   }
}
```

First Attempt

```
abstract class Logger {
   public static int ERR = 3;
   public static int NOTICE = 5;
   public static int DEBUG = 7;
   protected int mask;

   protected Logger next;
   public Logger setNext(Logger l) {
      next = l;
      return this; }

   abstract public void message(String msg, int priority);
}

class DebugLogger extends Logger {
   public DebugLogger(int mask) {
      this.mask = mask; }

   public void message(String msg, int priority) {
      if (priority <= mask) debug log here
      if (next != null) next.message(msg, priority);
   }
}
```

```
class EMailLogger extends Logger {
   public EMailLogger(int mask) { this.mask = mask; }

   public void message(String msg, int priority) {
      if (priority <= mask) send email here;
      if (next != null) next.message(msg, priority);
   }
```

Improved Logger

```
abstract class Logger {
  public static int ERR = 3;
  public static int NOTICE = 5;
  public static int DEBUG = 7;
  protected int mask;

  protected Logger next;
  public Logger setNext(Logger l) {
       next = l;
      return this; }

  public void message(String msg, int priority) {
    if (priority <= mask) log(msg);
    if (next != null) next.message(msg, priority);
  }

  abstract void log(String message);
}

class StderrLogger extends Logger {
  public StderrLogger(int mask) { this.mask = mask; }

  void message(String msg, int priority) { send to err}
}
```

```
class EMailLogger extends Logger {
  public EMailLogger(int mask) { this.mask = mask; }

   void message(String msg, int priority) { email here}
  }
}

class DebugLogger extends Logger {
  public DebugLogger(int mask) { this.mask = mask; }

  void message(String msg, int priority) { debug stuff}
  }
}
```

Is this the Chain of Responsibility?

Object-Oriented Recursion

A method polymorphically sends its message to a different receiver

Eventually a method is called that performs the task

The recursion then unwinds back to the original message send

Linked List toString

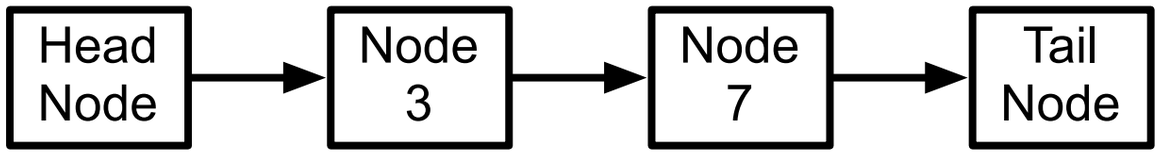

(3 7)

```
class HeadNode {
        public String toString() {
                return "(" + next.toString();
        }
}
```

```
class TailNode {
        public String toString() {
                return " )";
        }
}
```

```
class Node {
        public String toString() {
                return " " + element + next.toString();
        }
}
```

Linked List add

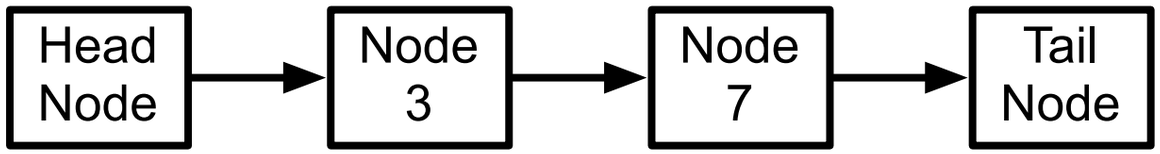


```
class HeadNode {
    public void add(int value) {
        next.add(value);
    }
}
```

```
class TailNode {
    public void add(int value) {
        prependNode(value);
    }
}
```

```
class Node {
    public void add(int value) {
        if (element > value)
            prependNode(value);
        else
            next.add(value);
    }
}
```

OO Recursion

Decorator

Chain of Responsibility